BYPASS SERIES

GLOBAL STANDARD COOLER

HY

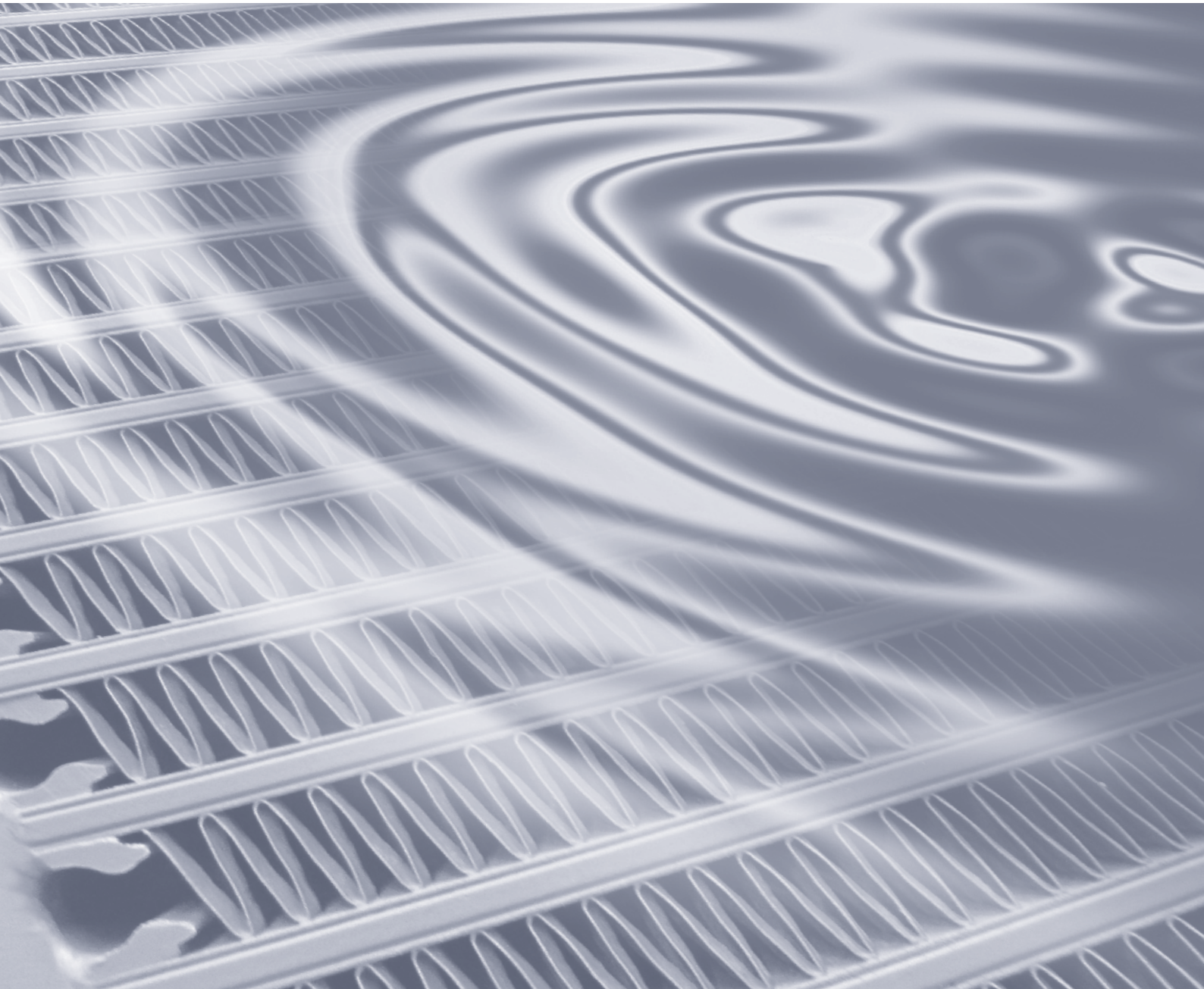

GLOBAL STANDARD AKG-Line HY

OIL-TO-AIR COOLING SYSTEMS WITH INTEGRATED BYPASS AND HYDRAULIC MOTOR

PRODUCT INFORMATION

AKG-Line is a standard line of products from the market leader in high performance aluminium cooling systems. AKG is best known for its world-wide presence, German engineering and extremely reliable product quality on the one hand and very competitive prices on the other hand.

The **AKG-Line Bypass** Series consists of different models for mobile and stationary applications. It is available through our global specialist dealer network. This line of products embraces all-purpose complete cooling systems that comply with European or American Standards, is suited for normal or rugged environmental operating conditions and powered by AC- (AY), DC- (DY) or hydraulic-motor-driven (HY) fans.

All of AKG's solutions have been developed with state-of-the-art technology, produced in compliance with the highest quality standards and are comprehensively tested in the company's own research and test facility.

FEATURES OF THE HY SERIES

- High-Performance cooling assembly
- Hydraulic motor powered fan
- Avoiding overstraining at cold start conditions and high oil flows
- The heat is transferred from the hot medium to the cooling ambient air
- Coolers can be universally used with hydraulic oil, transmission oil, engine oil and lubricating oil
- For the cooling of mineral oil, synthetic oil, biological oil as well as HFA, HFB, HFC and HFD liquids (other media on request)
- Can be exposed to operating pressures of up to 17 bar and operating temperatures of up to 120° C
- Standard design with 2 bar opening pressure bypass valve (other pressures on request)

BENEFITS

- Largest and most comprehensive series of mobile hydraulic coolers
- Highly flexible, complete ready-to-use cooling packages
- Compact design because of integration of bypass
- Faster approach of operating temperature
- Compact and robust design, field-tested during many years of use in rugged real life conditions
- Best heat transfer results per given cooler size due to comprehensive research and development
- Highest quality due to professional engineering and in-house manufacturing
- Available from stock or at short notice
- As a standard equipped with **AKG's double-life** hollow sections designed to increase cooler life span

OPERATING MODE OF INTEGRATED BYPASS

Especially with high oil flows or at cold start conditions (low oil temperatures and high oil viscosities) high pressures can occur in the cooler core.

In this case part of the volume flow is bypassing the cooler core through the integrated valve.

Like this a sufficient volume flow can be assured for the cooler and lubrication oil circuit - also with high pressure drops. Overstraining of the cooler core will be avoided effectively.

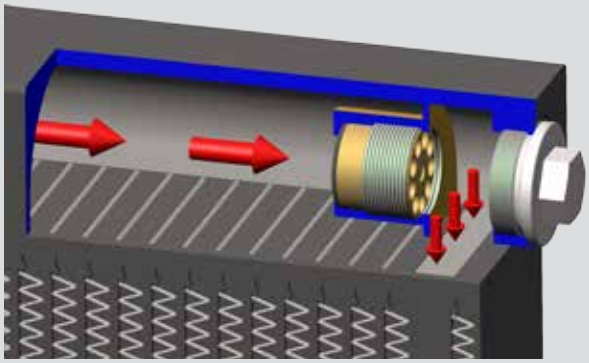

The installation of an external bypass is not necessary reducing costs and mounting space.

EASY SIZING DIAGRAM

FOR ENTRANCE-TEMPERATURE-DIFFERENCE 60 K

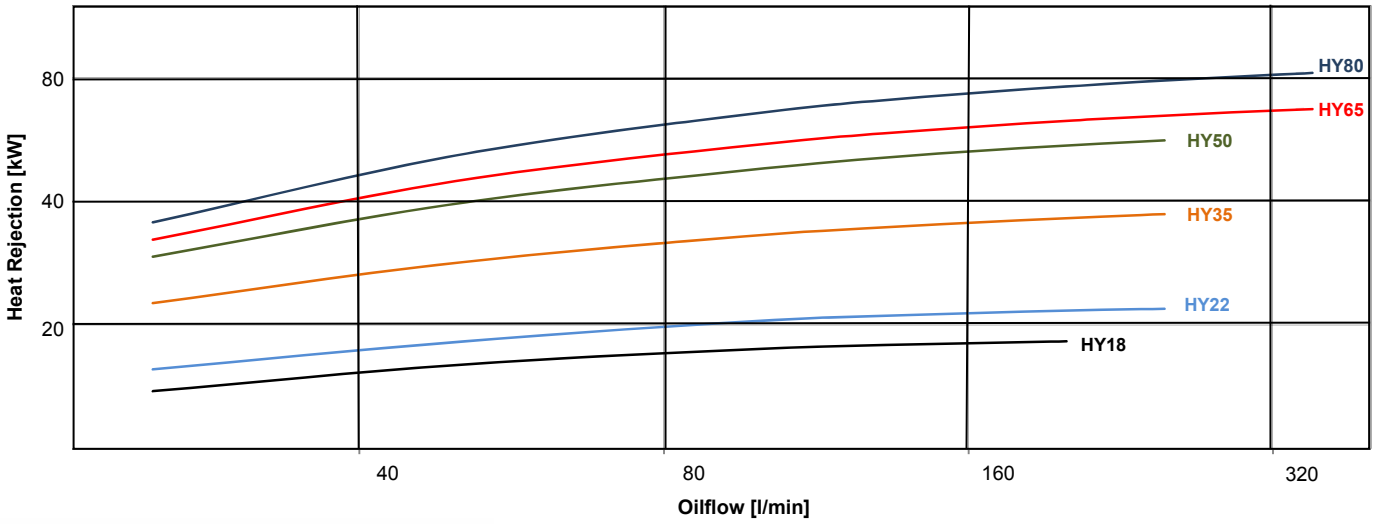

Selection by Specific Heat Rejection		
1. Input Data:		**Example**
Required Heat Rejection	P =	20 kW
Oilflow through Cooler	V =	150 l/min
Oil Inlet Temperature	T_Oil	90 °C
Cooling Airflow Temperature	T_CAF	30 °C
2. Determination of Specific Heat Rejection:		
Entering-Temperature-Difference	ETD =	90 °C - 30 °C = 60 K
Required Specific Heat Rejection	P/ETD	20 kW/60 K = 0,3 kW/K
3. Select According to Diagram and Result:		Next higher curve **HY 22**

SPECIFIC HEAT REJECTION

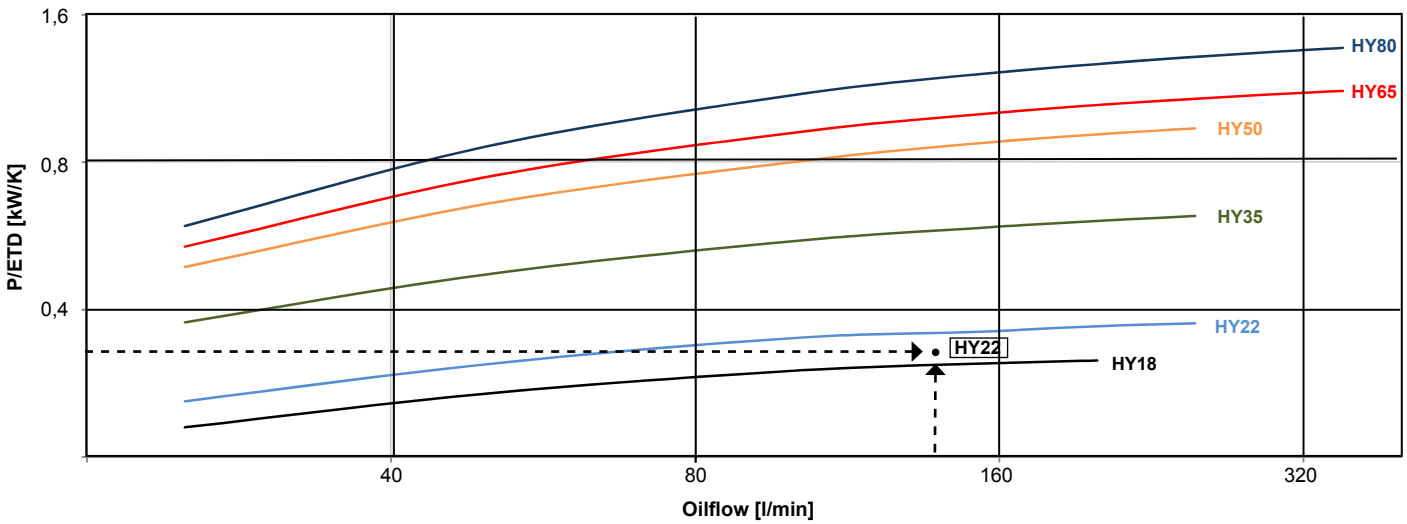

The AKG-Line Selection Software, which is available free of charge will guide you through the cooler model selection process in simple steps and will recommend the optimal AKG cooling package for your application: **www.akg-group.com**

GLOBAL STANDARD AKG-Line HY

TECHNICAL DATA

Model Size	Motor Size (cm^3)	Max. Speed (rpm)	Nominal Speed (rpm)	Max. Motor Pressure (bar)	Approx. Noise level (dB(A), 1m)	Approx. Net Weight of Assembly (kg)	Valve opening pressure (bypass) (bar)	Volume (l)	Working Pressure (bar)
HY18	11	3500	3000	250	80	17	2,0	2,3	17
HY22	11	3500	3000	250	83	21	2,0	3,5	17
HY35	11	3500	1500	250	81	26	2,0	4,5	17
HY50	11	3500	1500	250	80	35	2,0	5	17
HY65	11	3000	1500	250	81	53	2,0	7,5	17
HY80	11	3000	1500	250	83	61	2,0	9	17

All data based on nominal fan speed conditions

DIMENSIONS

Model Size	A	B	C (approx.)	D	E	F	G	H	J	K	L	M
HY18	391	450	300	324	107	40	G1	392	180	220	M8	ø14
HY22	402	440	330	328	123	49	G1	382	240	280	M8	ø14
HY35	496	600	375	427	105	36	G1 1/4	638	180	220	M8	ø14
HY50	601	700	365	532	104	36	G1 1/4	642	180	220	M8	ø14
HY65	613	690	395	538	123	48	G1 1/4	632	240	280	M10	ø14
HY80	666	790	460	583	123	43	G1 1/4	732	240	280	M10	ø14

All dimensions in mm

ORDERING INFORMATION

Serial Code: **Model Size:**

HY	

Optional Custom Features:

with:

with Blower Fan	**[B]**
with Resistplast Coating	**[+R]**
PTFE Based Coating	**[+T]**
with large Support Feet	**[+LF]**

without:

without Motor	**[-M]**
without Motor, without Fan	**[-FM]**
Cooler Only	**[C]**
Cooler without Paint	**[-P]**
without Support Feet	**[-F]**

Order Code Example:	Heat Exchanger, 22 KW, sucking Hydraulic fan,Bypass (2 bar)	->**HY22**
	Heat Exchanger, 80 KW, blowing Hydraulic fan,Bypass (2 bar)	->**HY80B**

COOLER DIMENSIONS HY18 TO HY80

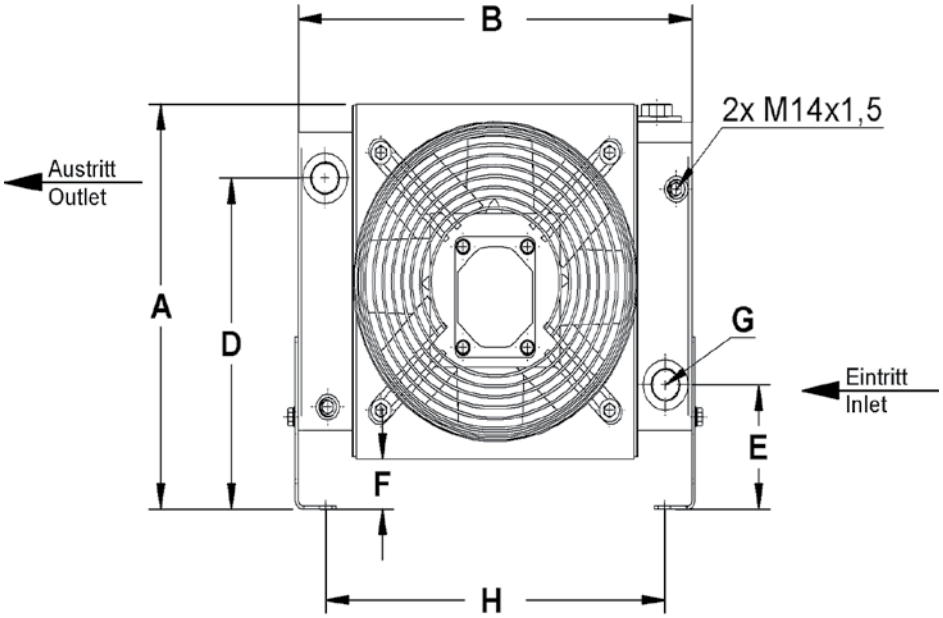

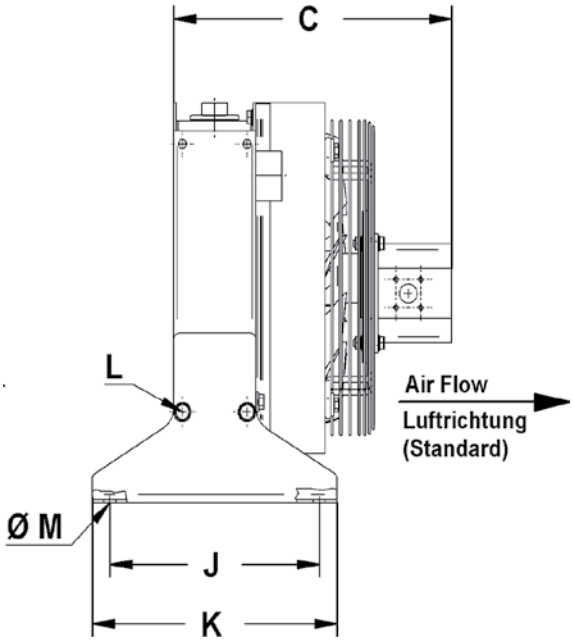

STANDARD SCOPE OF SUPPLY OF OIL-TO-AIR COOLING SYSTEM

Cooler made of painted aluminium with Bypass
Plastic fan
Fan-shroud, fingerguard and support feet all made of steel (chromated or powder coated)
Hydraulic motor

AKG Thermotechnik International GmbH & Co. KG
P. O. Box 1346
34363 Hofgeismar, Germany
Tel: +49 5671 - 8 83-0
Fax: +49 5671 - 35 82
E-Mail: info@akg-group.com
Internet: www.akg-group.com

AKG – A STRONG GLOBALLY INTEGRATED GROUP OF COMPANIES

AKG is a globally leading supplier of high-performance coolers and heat exchangers as well as customised system solutions that comply with the highest quality standards.

On a world-wide scale 2,400 employees work at 14 manufacturing facilities located in Germany, France, United Kingdom, Latvia, the U.S.A., China and India. Together with a number of additional oversea sales companies they are on duty around the clock.

The longstanding and competent partnership with global OEM customers from 22 lines of business such as construction machinery, compressed-air systems, agricultural and forestry machines, vehicle construction and many other fields of application give fresh and innovative impetus to the mobile and industrial standard type series.

AKG operates one of the world's largest research, development, measurement and validation centres for cooling solutions and customised applications.

AKG's heat exchangers have stood for innovative solutions as well as highest engineering and manufacturing competence for more than 95 years.

Your AKG-Partner

Aluminium Coolers – Made by AKG
DIN EN ISO 9001